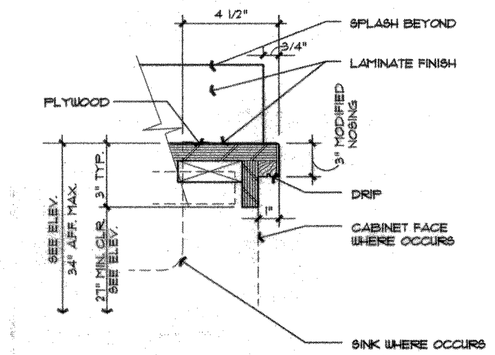

COUNTERTOP NOSING

SCALE: 3" = 1'-0"

16 / X6.1

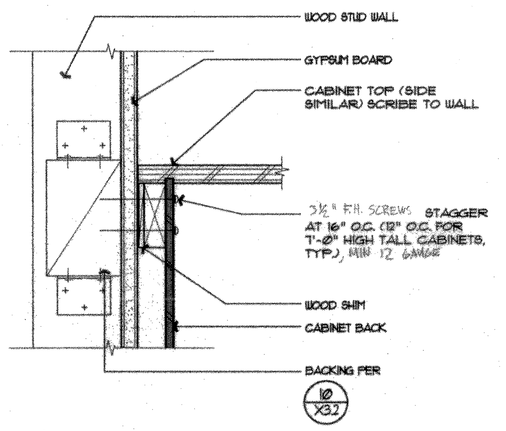

WALL ATTACHMENT

SCALE: 3" = 1'-0"

12 / X6.1

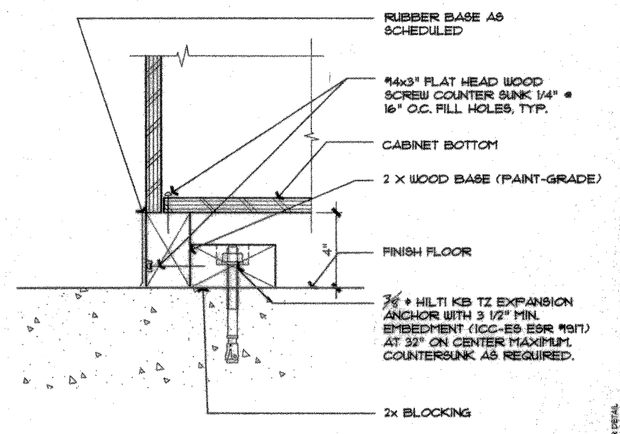

CUBBIES BASE ATTACHMENT

SCALE: 3" = 1'-0"

4 / X6.1

NOTE 2:

WHERE SINKS ARE PROVIDED, AT LEAST ONE SINK AND COUNTER SHALL BE WHEELCHAIR ACCESSIBLE

NOTE 1:

FAUCET CONTROLS AND OPENING MECHANISMS SHALL BE OPERABLE WITH ONE HAND AND SHALL NOT REQUIRE TIGHT GRASPING, PINCHING OR TWISTING OF THE WRIST. THE FORCE REQUIRED TO ACTIVATE CONTROLS SHALL BE NO MORE THAN 5 LBS. LEVER OPERATED, PUSH TYPE AND SELF-CLOSING VALVES TO REMAIN OPEN FOR AT LEAST TEN SECONDS.

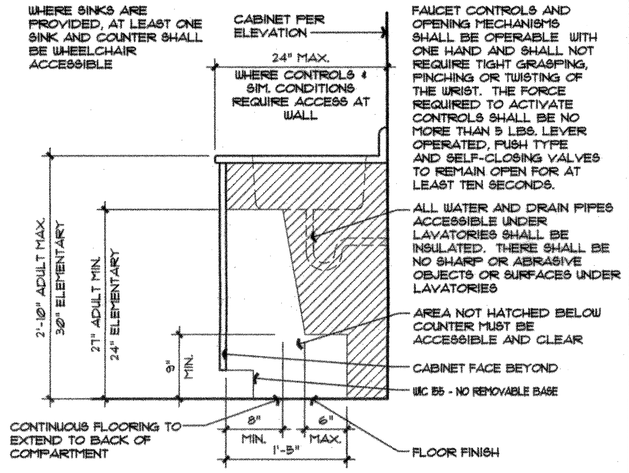

SECTION VIEW

ACCESSIBLE CLEARANCES

SCALE: 1" = 1'-0"

15 / X6.1

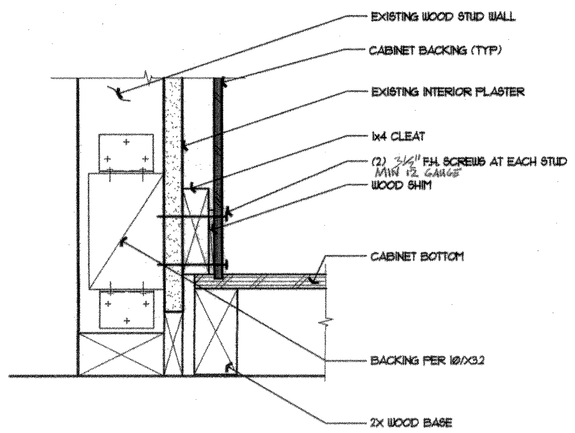

BASE AT WALL

SCALE: 3" = 1'-0"

11 / X6.1

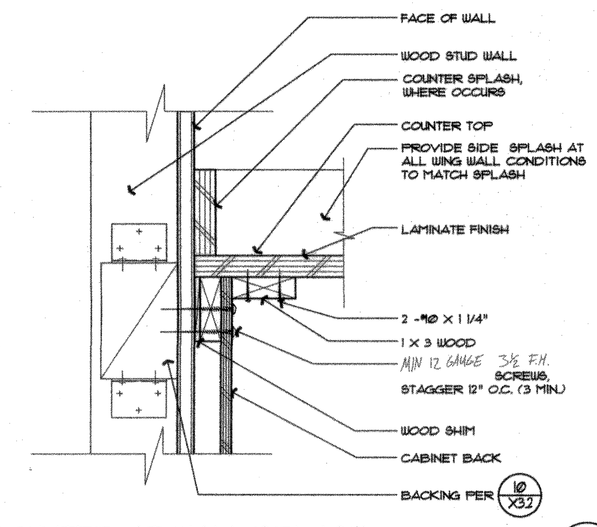

COUNTER AT WALL/SPLASH

SCALE: 3" = 1'-0"

3 / X6.1

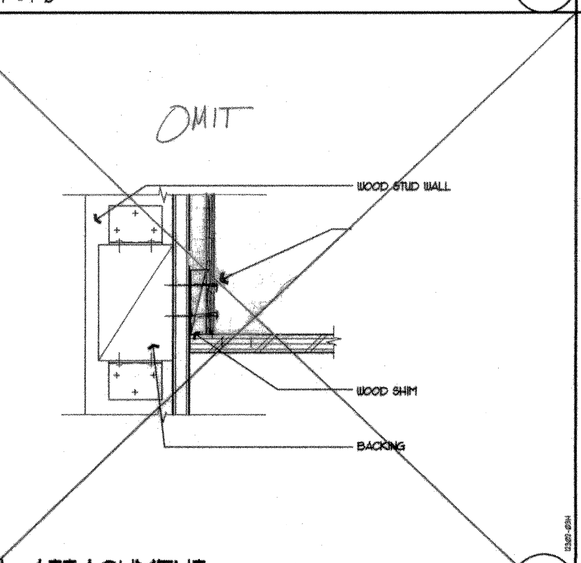

WALL ATTACHMENT

SCALE: 3" = 1'-0"

14 / X6.1

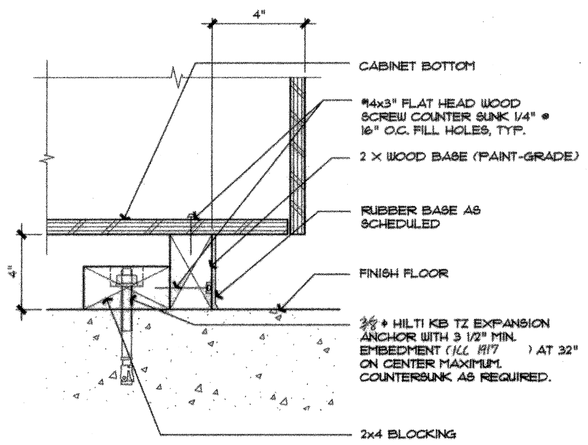

BASE ATTACHMENT

SCALE: 3" = 1'-0"

10 / X6.1

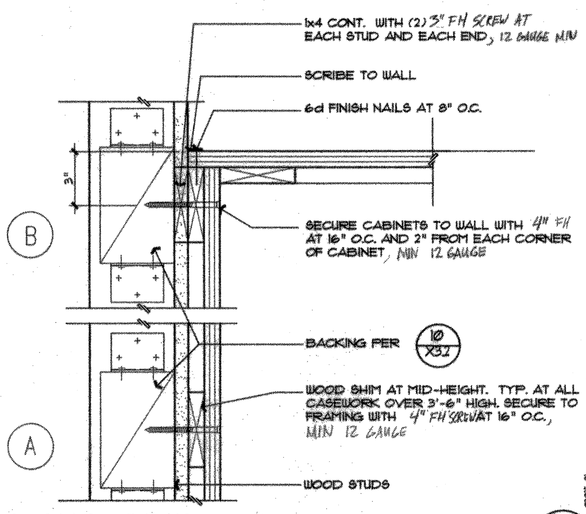

WALL ATTACHMENT

SCALE: 3" = 1'-0"

13 / X6.1

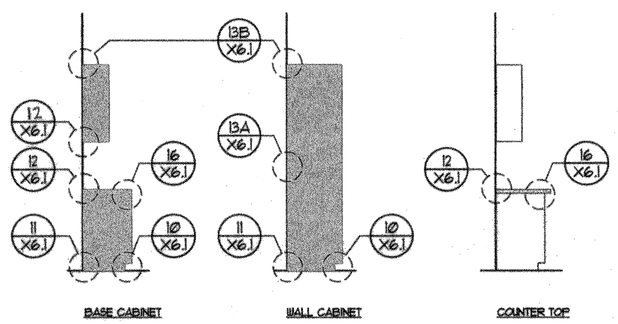

CABINET INSTALLATION DETAIL

SCALE: N.T.S.

9 / X6.1

BASE CABINET — SERIES 100

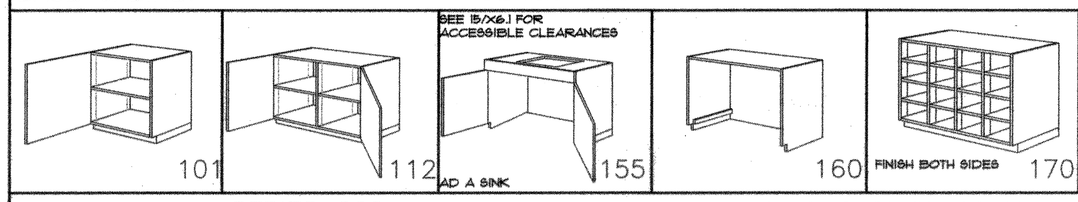

BASE CABINET — SERIES 200 / WALL HUNG CABINET DESIGNS — SERIES 300

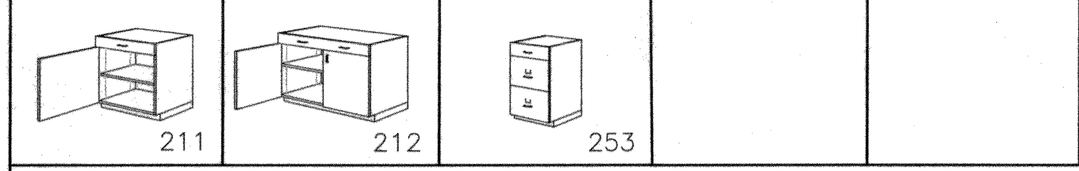

WALL HUNG CABINET DESIGNS — SERIES 300 / BASE CABINET — SERIES 400

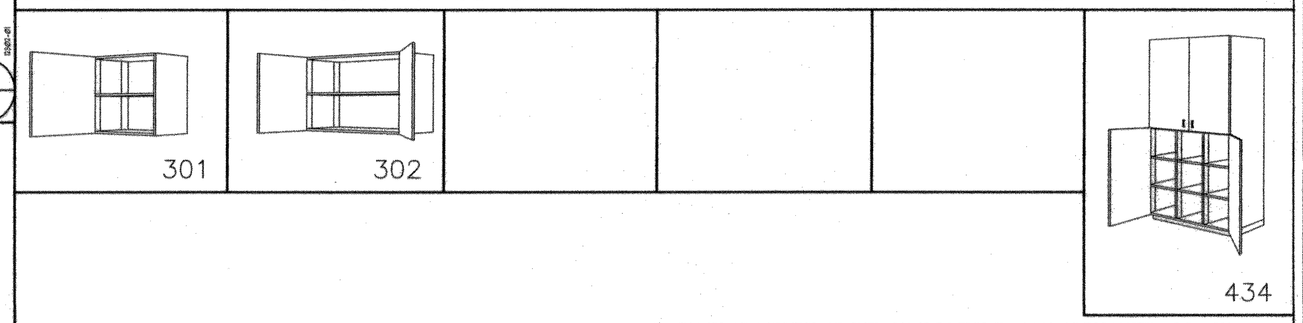

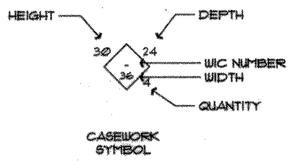

1. HEIGHTS OF CABINETS OR SHELVING IS TO FINISHED TOPS UNLESS NOTED OTHERWISE.
2. ALL CABINET DIMENSIONS ARE NOMINAL OUTSIDE DIMENSIONS. (EXCEPTION: CABINETS ADJACENT TO WALLS MAY BE INCREASED IN LENGTH TO ELIMINATE THE NEED FOR FILLER STRIPS.)
3. ALL CABINET BASES FOR FLOOR MOUNTED CABINETS SHALL BE 4" HIGH UNLESS NOTED OTHERWISE.
4. PROVIDE RESILIENT TOP SET BASE FINISH BASE MATERIAL (OR PER FINISH SCHEDULE) ON ALL FLOOR MOUNTED CABINETS.
5. ALL SHELVING SHALL BE ADJUSTABLE UNLESS NOTED OTHERWISE.
6. PROVIDE 4" HIGH BACKSPLASH AT ALL COUNTERTOPS UNLESS NOTED OTHERWISE.
7. PROVIDE LOCKS AT ALL DOORS AND DRAWERS.

CABINET SCHEDULE AND NOTES

SCALE: N.T.S.

1 / X6.1

San Gabriel Unified School District

408 Junipero Serra
San Gabriel, CA 91776

IBI GROUP

ARCHITECTS ENGINEERS PLANNERS

ARCHITECT:
IBI Group
18401 Von Karman Avenue, Suite 110
Irvine, California 92612
Phone 949-833-5588
Fax 949-833-5511

STRUCTURAL ENGINEER:
Martin, Chow & Nakabara, Inc.
3185-C Airway Avenue
Costa Mesa, CA 92626
Phone 714-979-3003
Fax 714-979-3259

MECHANICAL ENGINEER:
Fundament & Associates
26 Executive Park #100
Irvine, CA 92614
Phone 949-251-1131
Fax 949-251-9434

ELECTRICAL ENGINEER:
FBA
3420 Irvine Avenue, Suite 200
Newport Beach, CA 92660-3189
Phone 949-852-9995
Fax 949-852-1657

CIVIL ENGINEER:
Snipes-Dye Associates
8348 Center Drive, Suite G
La Mesa, CA 91942-2910
Phone 619-697-9234
Fax 619-460-2033

LANDSCAPE ENGINEER:
IBI Group
10 Exchange Place- Suite 112
Salt Lake City UT 84111 USA
Phone 801-532-4233
Fax 801-532-4231

IDENTIFICATION STAMP
DIV. OF THE STATE ARCHITECT
OFFICE OF REGULATION SERVICES
03-112620
AP FLS SSH SS
DATE

LICENSED ARCHITECT KEVIN S. FLEMING NO. C26668 08-31-11 RENEWAL DATE STATE OF CALIFORNIA

This drawing, as an instrument of service, is the property of the Architect and may not be reproduced without their permission and unless the reproduction carries their name. All design and other information show on this drawing are for the use on the specified project only and shall not be used otherwise without written permission of the Architect.

Written dimensions shall have precedence over scaled dimensions. Contractors shall verify and be responsible for all dimensions and conditions on the job and the Architect shall be informed of any variations from the dimensions and conditions show on the drawing. Shop drawings shall be submitted to the Architect for approval before proceeding with fabrication.

Del Mar High School

312 Del Mar Ave
San Gabriel, CA 91776

TYPICAL CASEWORK DETAILS

Project Number	20318
Date	FEBRUARY, 2010
Drawn By	
Checked By	

X6.1

Scale