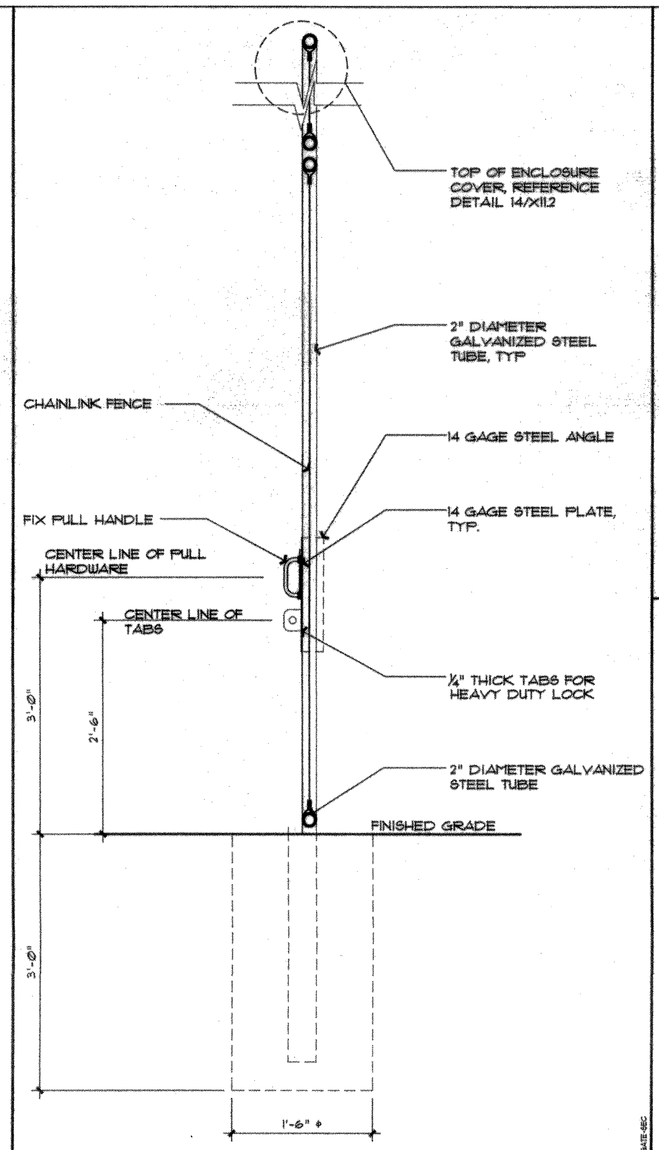

SITE/BUILDING GATE SECTION

SCALE: 1" = 1'-0"

11 / X1.4

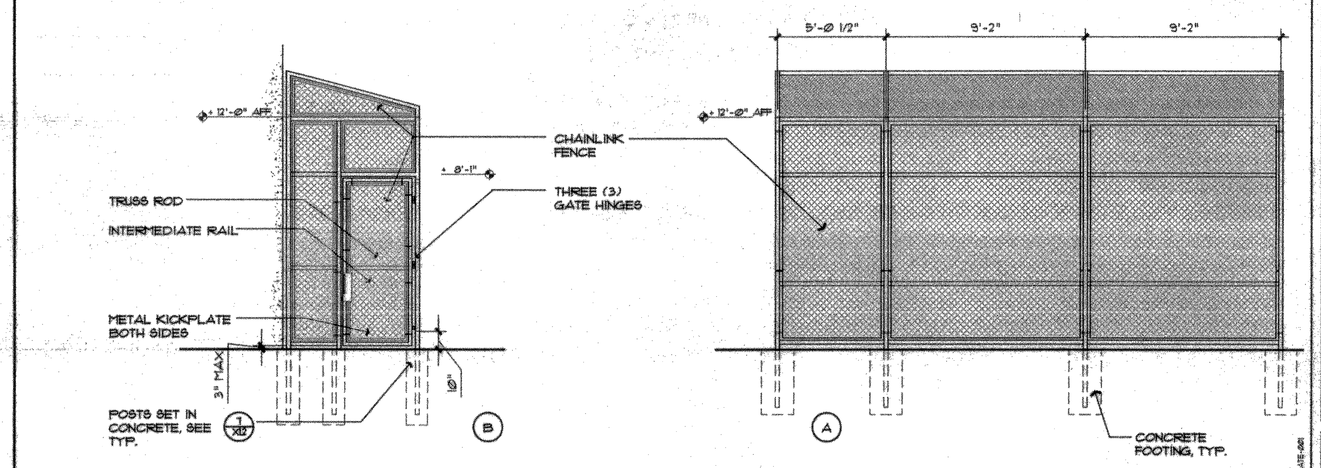

SITE FENCE ELEVATION

SCALE: 1/4"=1'-0"

4 / X1.4

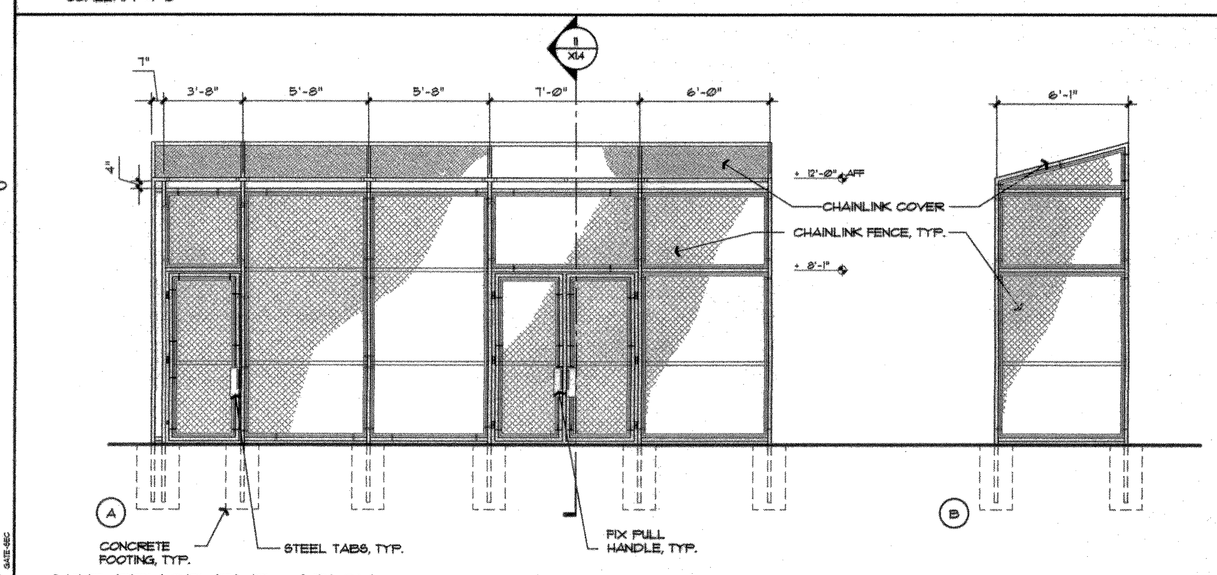

SITE FENCE ELEVATION

SCALE: 1/4"=1'-0"

3 / X1.4

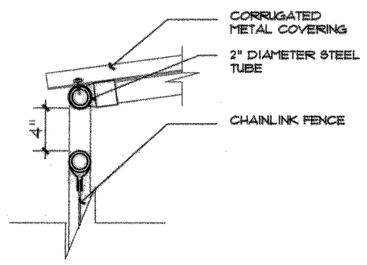

SITE/BUILDING GATE SECTION

SCALE: 1-1/2" = 1'-0"

14 / X1.4

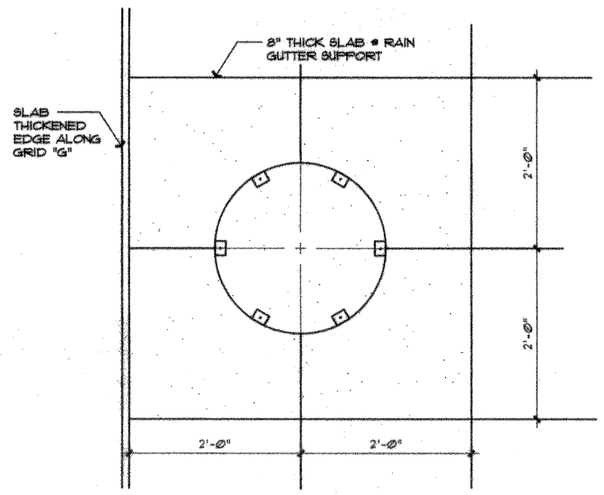

PLANTER BASE

SCALE: 1" = 1'-0"

13 / X1.4

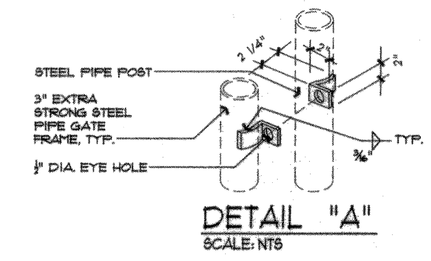

DETAIL "A"

SCALE: NTS

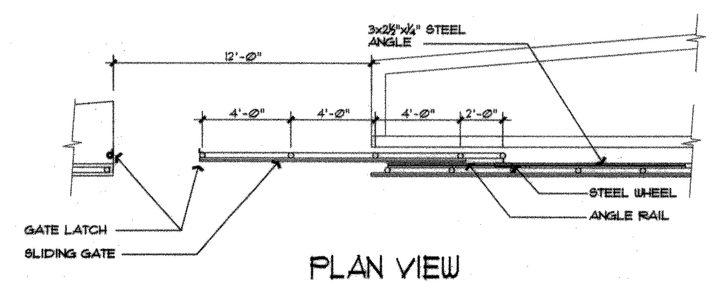

PLAN VIEW

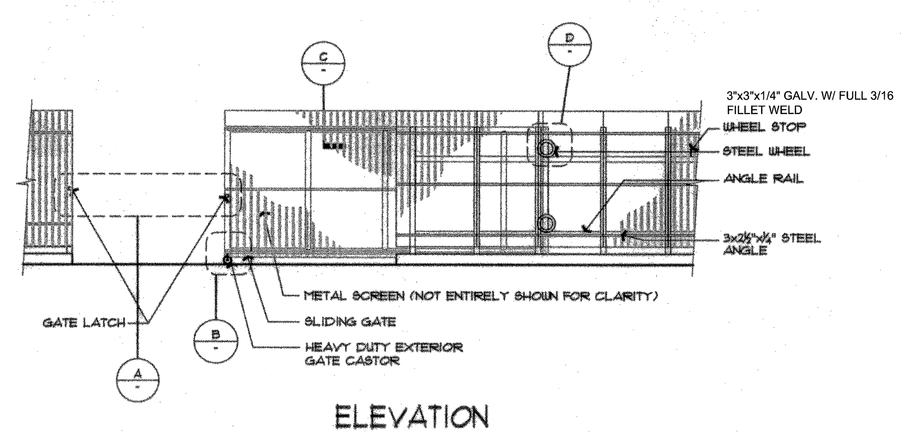

ELEVATION

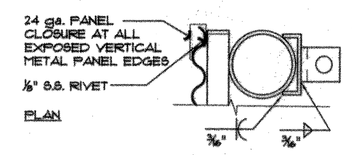

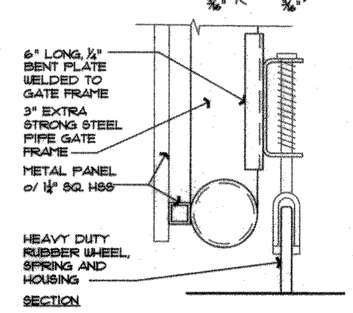

DETAIL "B"

SCALE: NTS

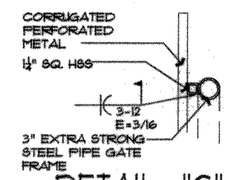

DETAIL "C"

SCALE: NTS

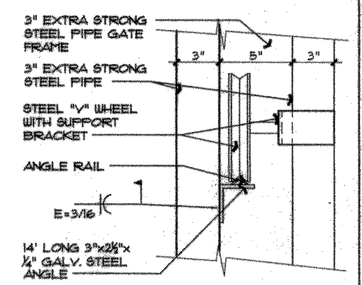

DETAIL "D"

SCALE: NTS

SLIDING GATE W/ METAL SCREEN

SCALE: 1/4" = 1'-0"

1 / X1.4

San Gabriel Unified School District

408 Junipero Serra
San Gabriel, CA 91776

IBI GROUP

ARCHITECTS ENGINEERS PLANNERS

ARCHITECT:
IBI Group
18401 Von Karman Avenue, Suite 110
Irvine, California 92612
Phone 949-833-5588
Fax 949-833-5511

STRUCTURAL ENGINEER:
Martin, Chow & Nakabara, Inc.
3185-C Airway Avenue
Costa Mesa, CA 92626
Phone 714-979-3003
Fax 714-979-3259

MECHANICAL ENGINEER:
Fundament & Associates
26 Executive Park #100
Irvine, CA 92614
Phone 949-251-1131
Fax 949-251-9434

ELECTRICAL ENGINEER:
FBA
3420 Irvine Avenue, Suite 200
Newport Beach, CA 92660-3189
Phone 949-852-9995
Fax 949-852-1657

CIVIL ENGINEER:
Snipes-Dye Associates
8348 Center Drive, Suite G
La Mesa, CA 91942-2910
Phone 619-697-9234
Fax 619-460-2033

LANDSCAPE ENGINEER:
IBI Group
10 Exchange Place- Suite 112
Salt Lake City UT 84111 USA
Phone 801-532-4233
Fax 801-532-4231

IDENTIFICATION STAMP
DIV. OF THE STATE ARCHITECT
OFFICE OF REGULATION SERVICES
03-112620
DATE FLS SEM SS

LICENSED ARCHITECT KEVIN S. FLEMING NO. C26668 09-31-11 RENEWAL DATE STATE OF CALIFORNIA

This drawing, as an instrument of service, is the property of the Architect and may not be reproduced without their permission and unless the reproduction carries their name. All design and other information show on this drawing are for the use on the specified project only and shall not be used otherwise without written permission of the Architect.

Written dimensions shall have precedence over scaled dimensions. Contractors shall verify and be responsible for all dimensions and conditions on the job and the Architect shall be informed of any variations from the dimensions and conditions show on the drawing. Shop drawings shall be submitted to the Architect for approval before proceeding with fabrication.

Del Mar High School

312 Del Mar Ave
San Gabriel, CA 91776

FENCE AND GATE DETAILS

Project Number	20318
Date	FEBRUARY, 2010
Drawn By	----------
Checked By	----------

X1.4

Scale SCALE