San Gabriel Unified School District

408 Junipero Serra
San Gabriel, CA 91776

IBI GROUP
ARCHITECTS ENGINEERS PLANNERS

ARCHITECT:
IBI Group
18401 Von Karman Avenue, Suite 110
Irvine, California 92612
Phone 949-833-5588
Fax 949-833-5511

STRUCTURAL ENGINEER:
Martin, Chow & Nakabara, Inc.
3185-C Airway Avenue
Costa Mesa, CA 92626
Phone 714-979-3003
Fax 714-979-3259

MECHANICAL ENGINEER:
Fundament & Associates
26 Executive Park #100
Irvine, CA 92614
Phone 949-251-1131
Fax 949-251-9434

ELECTRICAL ENGINEER:
FBA
3420 Irvine Avenue, Suite 200
Newport Beach, CA 92660-3189
Phone 949-852-9995
Fax 949-852-1657

CIVIL ENGINEER:
Snipes-Dye Associates
8348 Center Drive, Suite G
La Mesa, CA 91942-2910
Phone 619-697-9234
Fax 619-460-2033

LANDSCAPE ENGINEER:
IBI Group
10 Exchange Place- Suite 112
Salt Lake City UT 84111 USA
Phone 801-532-4233
Fax 801-532-4231

IDENTIFICATION STAMP
DIV. OF THE STATE ARCHITECT
OFFICE OF REGULATION SERVICES
03-112620
AC FLS SS
DATE

LICENSED ARCHITECT ★ KEVIN S. FLEMING ★ NO. C26660 08-31-11 RENEWAL DATE ★ STATE OF CALIFORNIA

This drawing, as an instrument of service, is the property of the Architect and may not be reproduced without their permission and unless the reproduction carries their name. All design and other information show on this drawing are for the use on the specified project only and shall not be used otherwise without written permission of the Architect.

Written dimensions shall have precedence over scaled dimensions. Contractors shall verify and be responsible for all dimensions and conditions on the job and the Architect shall be informed of any variations from the dimensions and conditions show on the drawing. Shop drawings shall be submitted to the Architect for approval before proceeding with fabrication.

Del Mar High School

312 Del Mar Ave
San Gabriel, CA 91776

SIGNAGE
DETAILS

Project Number	20318
Date	FEBRUARY, 2010
Drawn By	
Checked By	

X9.1

Scale

ELECTRICAL ROOM DOOR SIGN (12/X9.1)

SCALE: HALF SCALE

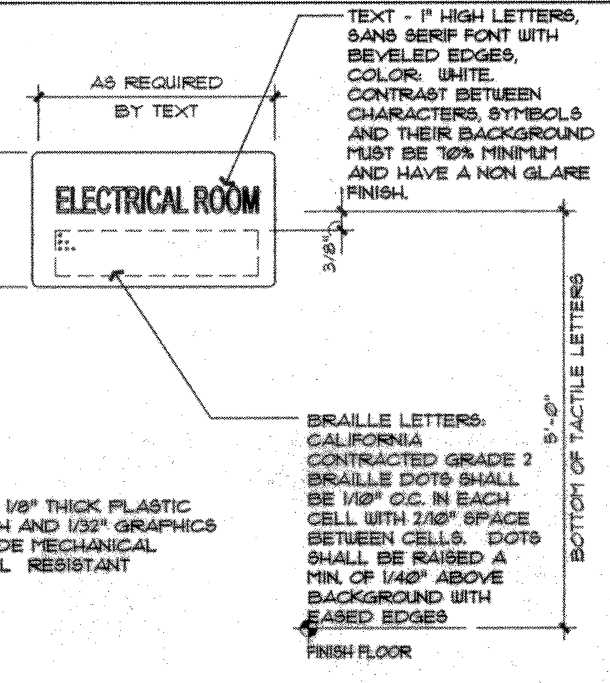

NOTES:

1. SIGN MATERIAL TO BE 1/8" THICK PLASTIC WITH NON-GLARE FINISH AND 1/32" GRAPHICS AND LETTERS. PROVIDE MECHANICAL MOUNTING WITH VANDAL RESISTANT FASTENERS.

DOOR SIGNAGE LOCATIONS (8/X9.1)

SCALE: 1/8" = 1'-0"

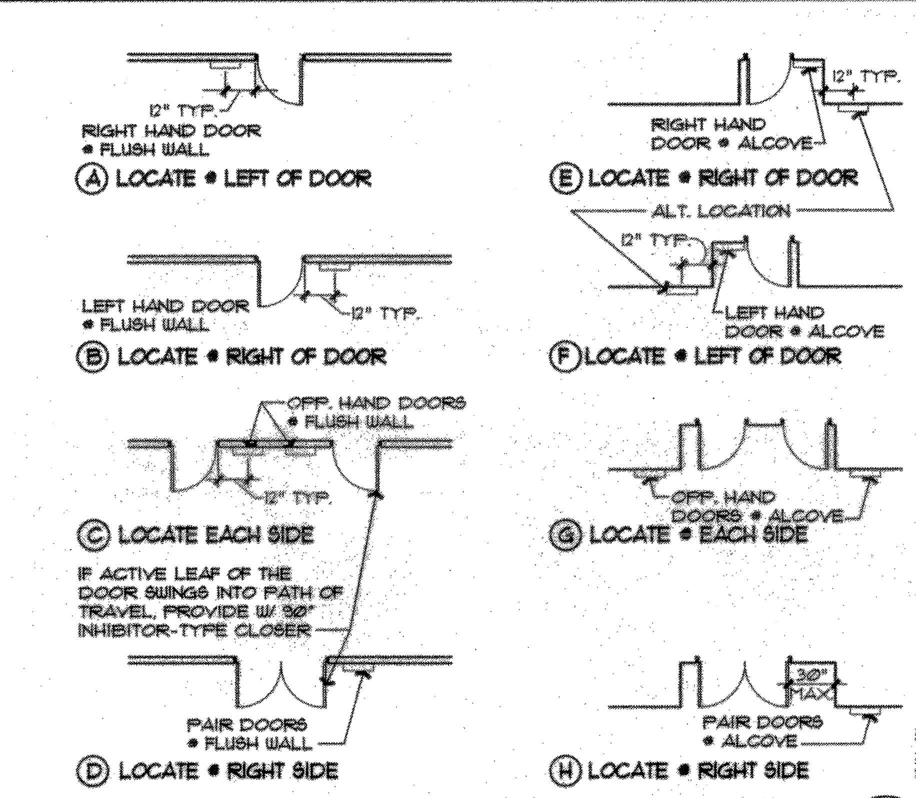

TYP. EXIT SIGNAGE LOCATION (4/X9.1)

SCALE: 3/8" = 1'-0"

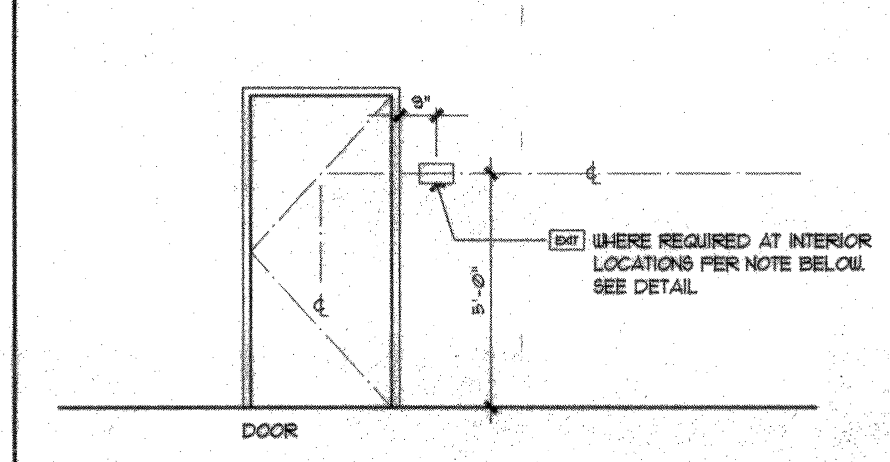

NOTE: WHERE EXIT SIGNS ARE REQUIRED/PROVIDED, PROVIDE TACTILE SIGNAGE WITH BRAILLE. LOCATE AT THE STRIKE SIDE OF THE INTERIOR DOORWAYS SIMILAR TO THE REQUIREMENTS OF THE ROOM IDENTIFICATION SIGNAGE.

ENTER ONE WAY SIGN (15/X9.1)

SCALE: 3" = 1'-0"

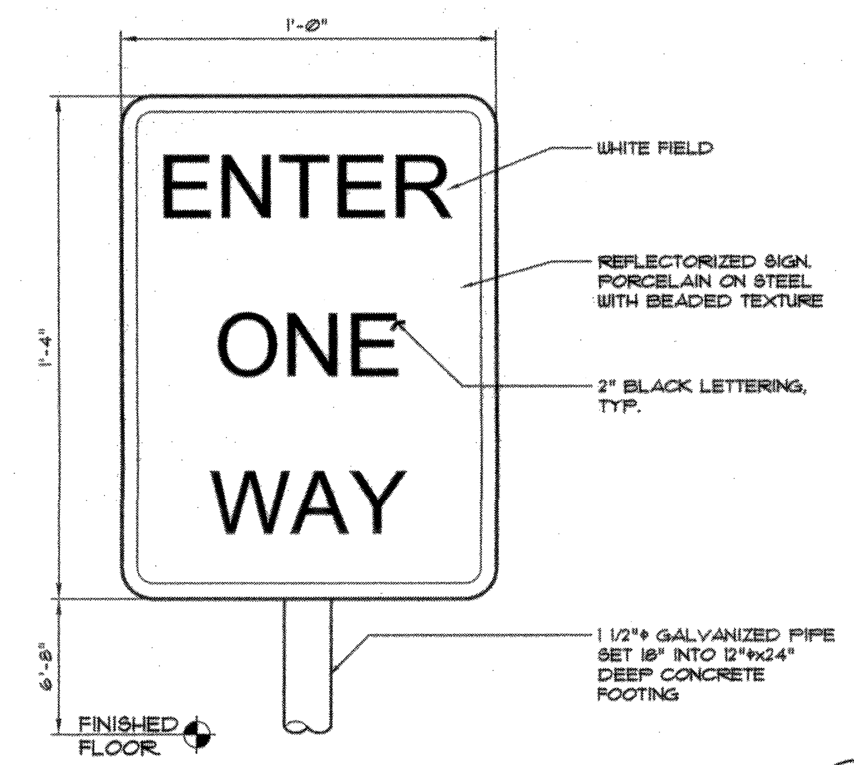

NO SMOKING SIGN (11/X9.1)

SCALE: NTS

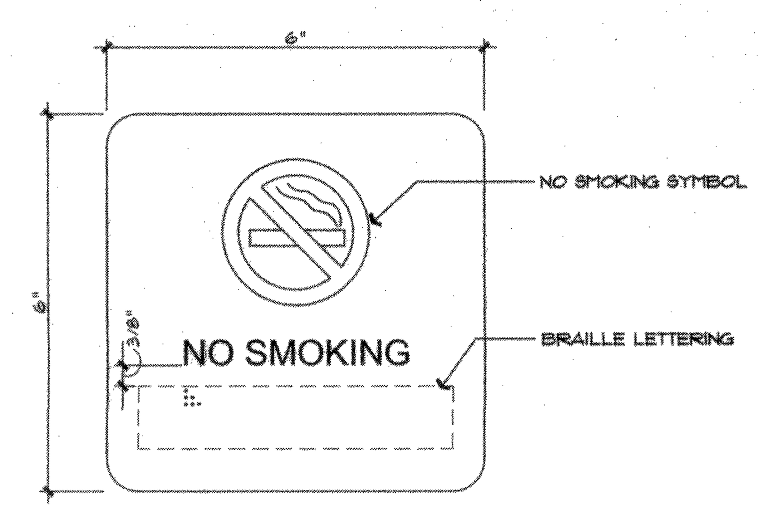

NOTE

1. FOR ADDITIONAL NOTES AND DIMENSIONS REFER TO 10/X9.1

ROOM IDENTIFICATION SIGN (7/X9.1)

SCALE: HALF SCALE

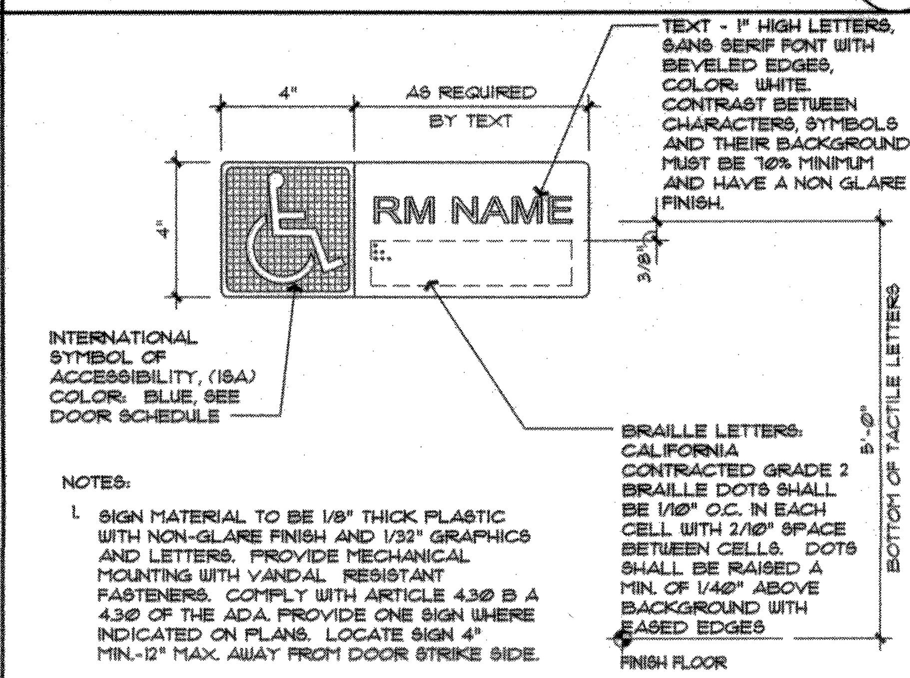

NOTES:

1. SIGN MATERIAL TO BE 1/8" THICK PLASTIC WITH NON-GLARE FINISH AND 1/32" GRAPHICS AND LETTERS. PROVIDE MECHANICAL MOUNTING WITH VANDAL RESISTANT FASTENERS. COMPLY WITH ARTICLE 4.30 B A 4.30 OF THE ADA. PROVIDE ONE SIGN WHERE INDICATED ON PLANS. LOCATE SIGN 4" MIN.-12" MAX. AWAY FROM DOOR STRIKE SIDE.
2. PROVIDE ADHESIVE AND BACKING PLATE, TO PAINT, FOR MOUNTING AT WINDOW.
3. AT MAIN EXTERIOR ENTRANCES, PROVIDE 4" X 4" ISA SIGN ONLY PER CBC 1117B.5.1

TYP. SIGNAGE AT TOILET ROOM DOORS (3/X9.1)

SCALE: 3/8" = 1'-0"

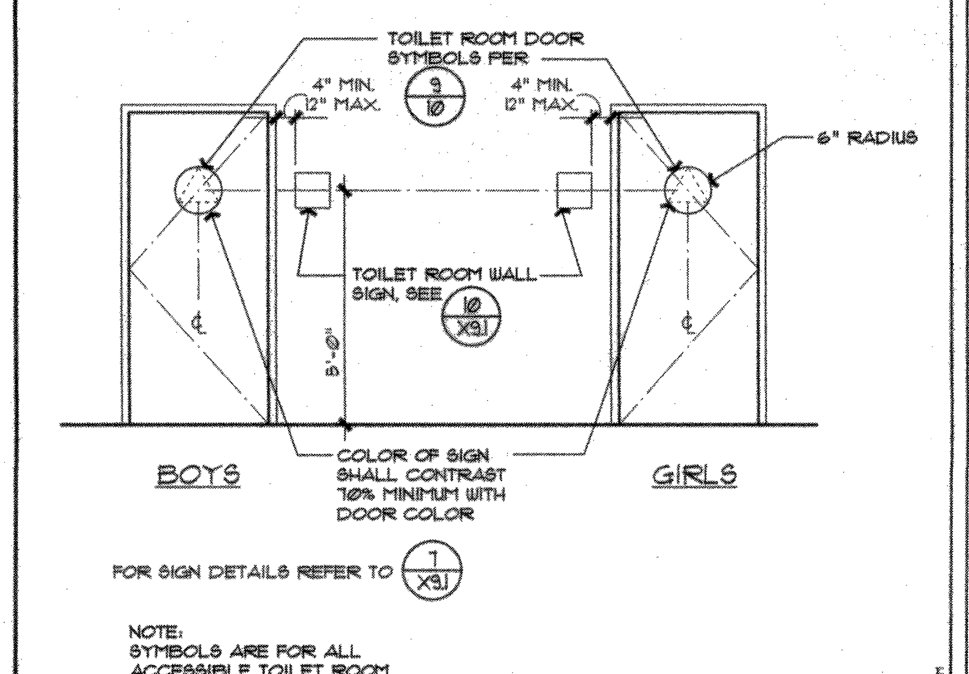

FOR SIGN DETAILS REFER TO 1/X9.1

NOTE:
SYMBOLS ARE FOR ALL ACCESSIBLE TOILET ROOM DOORS

FIRE RISER ROOM SIGNAGE (14/X9.1)

SCALE: HALF SCALE

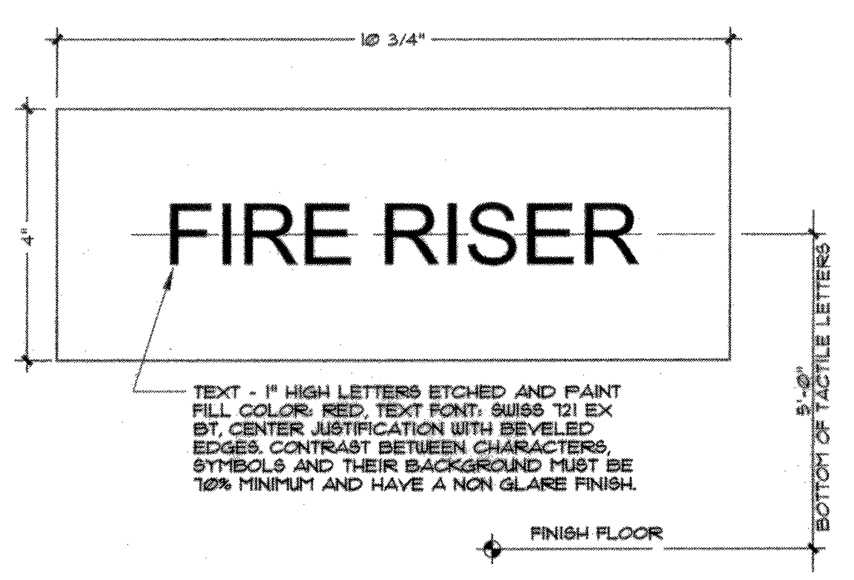

TOILET ROOM WALL SIGNAGE (10/X9.1)

SCALE: 1 1/2" = 1'-0"

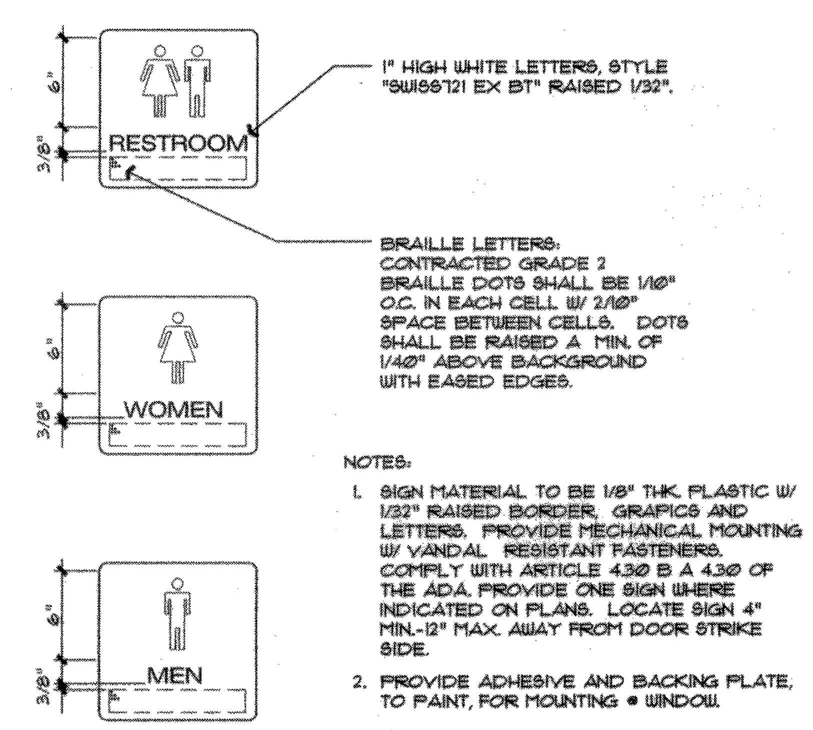

NOTES:

1. SIGN MATERIAL TO BE 1/8" THK. PLASTIC W/ 1/32" RAISED BORDER, GRAPICS AND LETTERS. PROVIDE MECHANICAL MOUNTING W/ VANDAL RESISTANT FASTENERS. COMPLY WITH ARTICLE 4.30 B A 4.30 OF THE ADA. PROVIDE ONE SIGN WHERE INDICATED ON PLANS. LOCATE SIGN 4" MIN.-12" MAX. AWAY FROM DOOR STRIKE SIDE.
2. PROVIDE ADHESIVE AND BACKING PLATE, TO PAINT, FOR MOUNTING @ WINDOW.

SIGNAGE FONT DETAILS (6/X9.1)

SCALE: N.T.S.

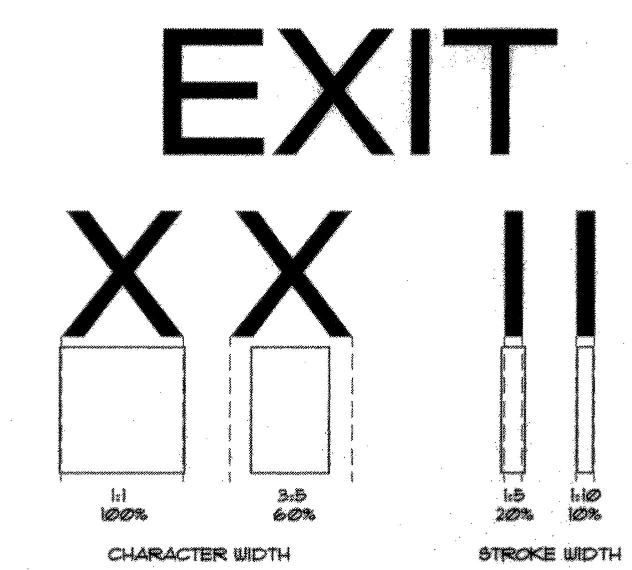

TYPICAL SIGNAGE AT ACCESSIBLE DOORS (2/X9.1)

SCALE: NONE

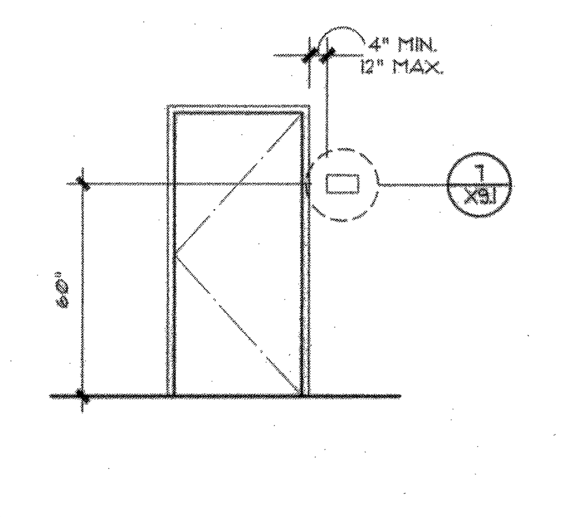

DO NOT ENTER SIGN (13/X9.1)

SCALE: 3" = 1'-0"

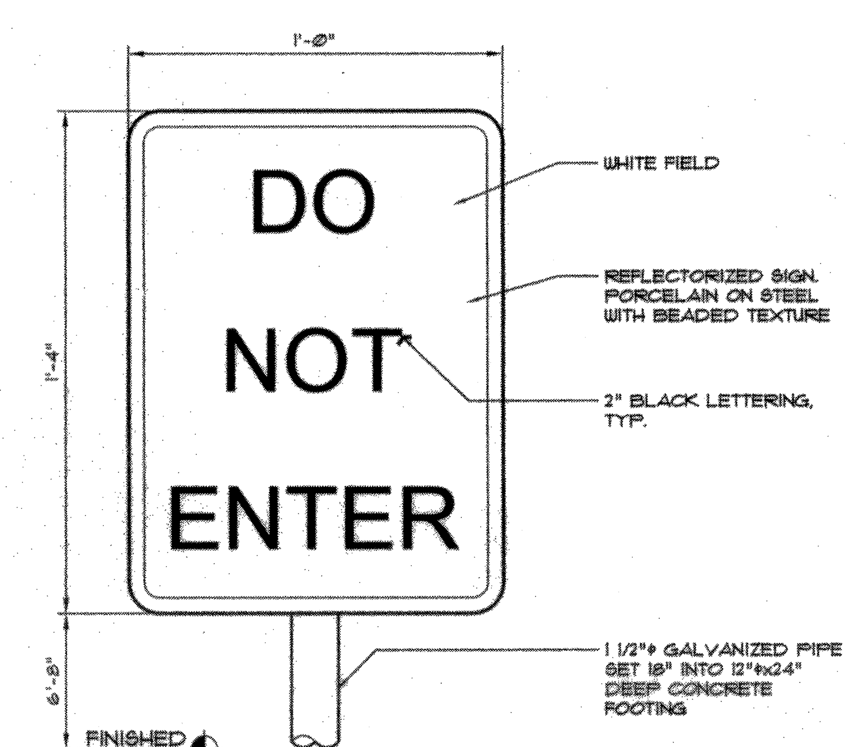

TOILET ROOM DOOR SIGNAGE (9/X9.1)

SCALE: NONE

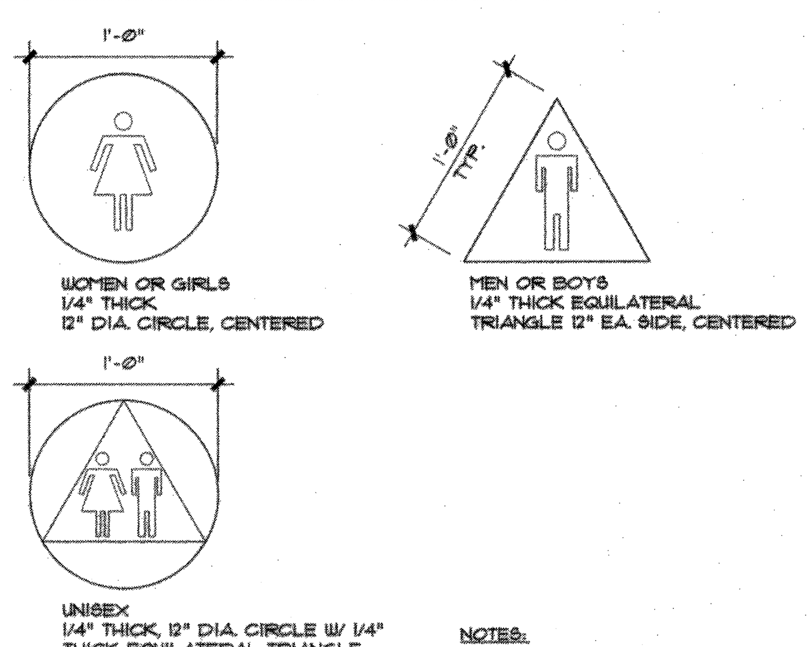

NOTES:

1. SIGNS TO BE BLUE WITH WHITE GRAPHICS.
2. USE MEN/WOMEN AT STAFF.

EXIT SIGNAGE (5/X9.1)

SCALE: 3" = 1'-0"

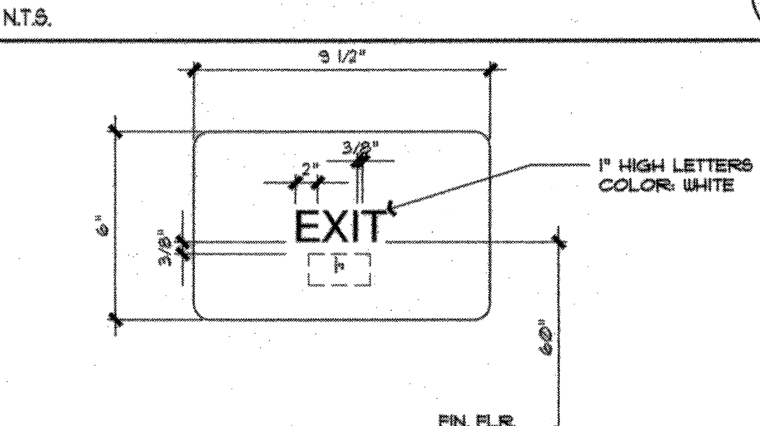

NOTES:

SIGN MATERIAL TO BE 1/8" THK. PLASTIC W/ 1/32" RAISED SANS SERIF UPPERCASE CHARACTERS. PROVIDE MECHANICAL MOUNTING W/ VANDAL RESISTANT FASTENERS. CONTRAST BETWEEN CHARACTERS, SYMBOLS AND THEIR BACKGROUND MUST BE 70% MINIMUM AND HAVE A NON-GLARE FINISH. CHARACTERS ON SIGNS SHALL HAVE A WIDTH-TO-HEIGHT RATIO OF BETWEEN 3:5 AND 1:1 AND A STROKE WIDTH-TO-HEIGHT RATIO OF BETWEEN 1:5 AND 1:10. COMPLY WITH ARTICLE 4.30 B A 4.30 OF THE ADA. PROVIDE ONE SIGN WHERE INDICATED ON PLANS. LOCATE SIGN 4" MIN.-12" MAX. AWAY FROM DOOR STRIKE SIDE.

BRAILLE LETTERS: CALIFORNIA CONTRACTED GRADE 2 BRAILLE DOTS SHALL BE 1/10" O.C. IN EACH CELL W/ 2/10" SPACE BETWEEN CELLS. DOTS SHALL BE RAISED A MIN. OF 1/40" ABOVE BACKGROUND WITH EASED EDGES WITH DOME TOPS.

PROVIDE ADHESIVE AND BACKING PLATE, TO PAINT, FOR MOUNTING @ WINDOW.

SIGNAGE NOTES (1/X9.1)

SIGNAGE NOTES:

1. FOR PROPORTION OF TEXT SIGNAGE REFER TO 6/X9.1
2. FOR DOOR SIGNAGE LOCATION REFER TO 8/X9.1
3. FOR "NO SMOKING" SIGNAGE REFER TO 11/X9.1
4. FOR ASSISTIVE LISTENING SIGNAGE REFER TO 12/X9.1